IBS12
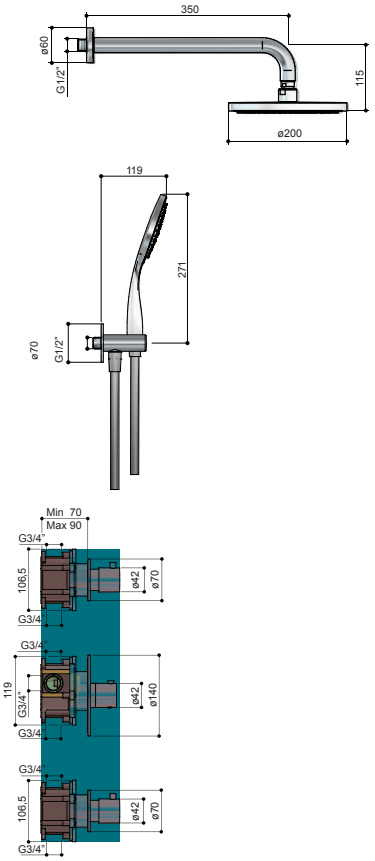
hotbath
Italian bathroomware