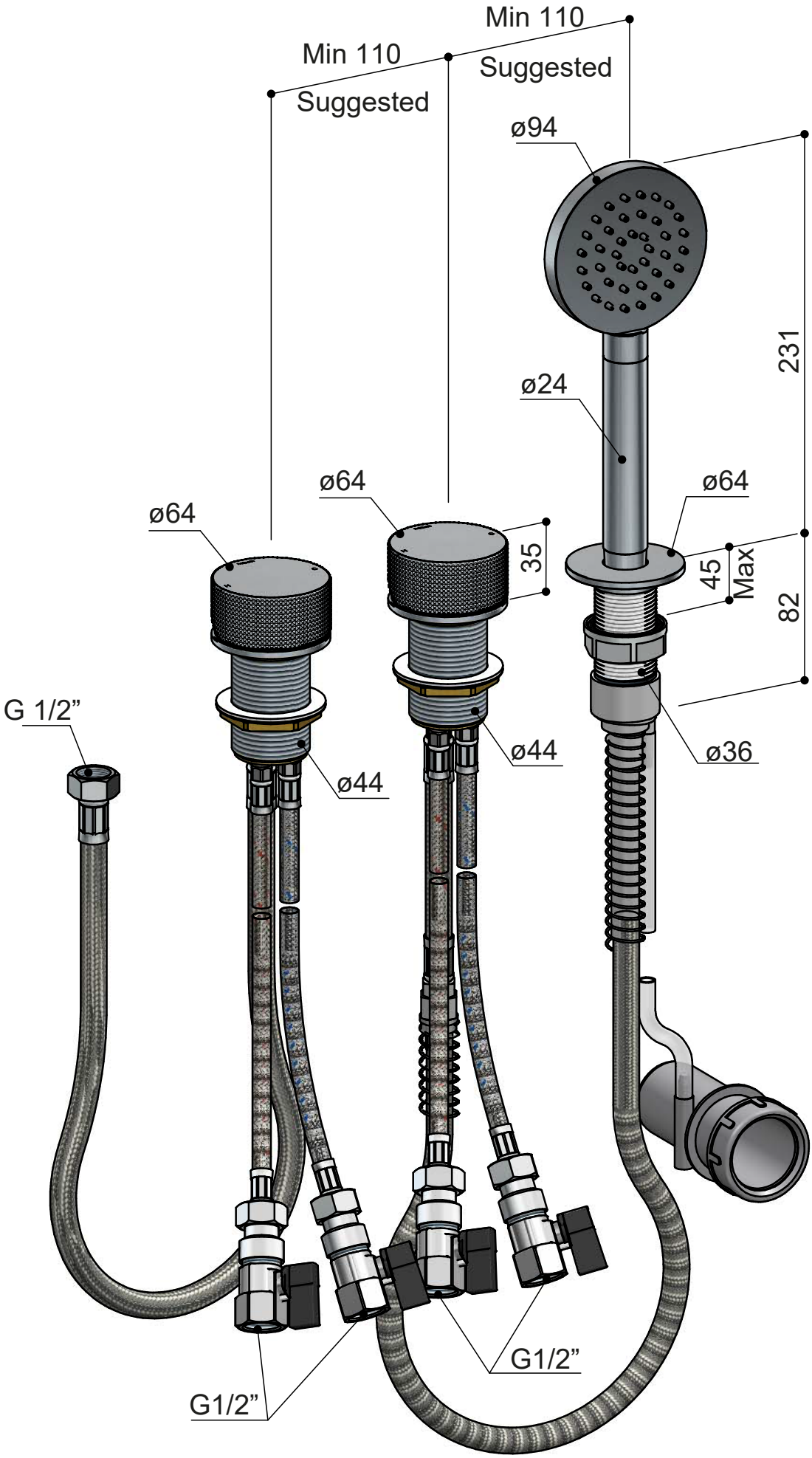
Min 110
Suggested
Min 110
Suggested
ø94
231
ø24
ø64
ø64
ø64
35
45
Max
82
G 1/2”
ø44
ø44
ø36
G1/2”
G1/2”