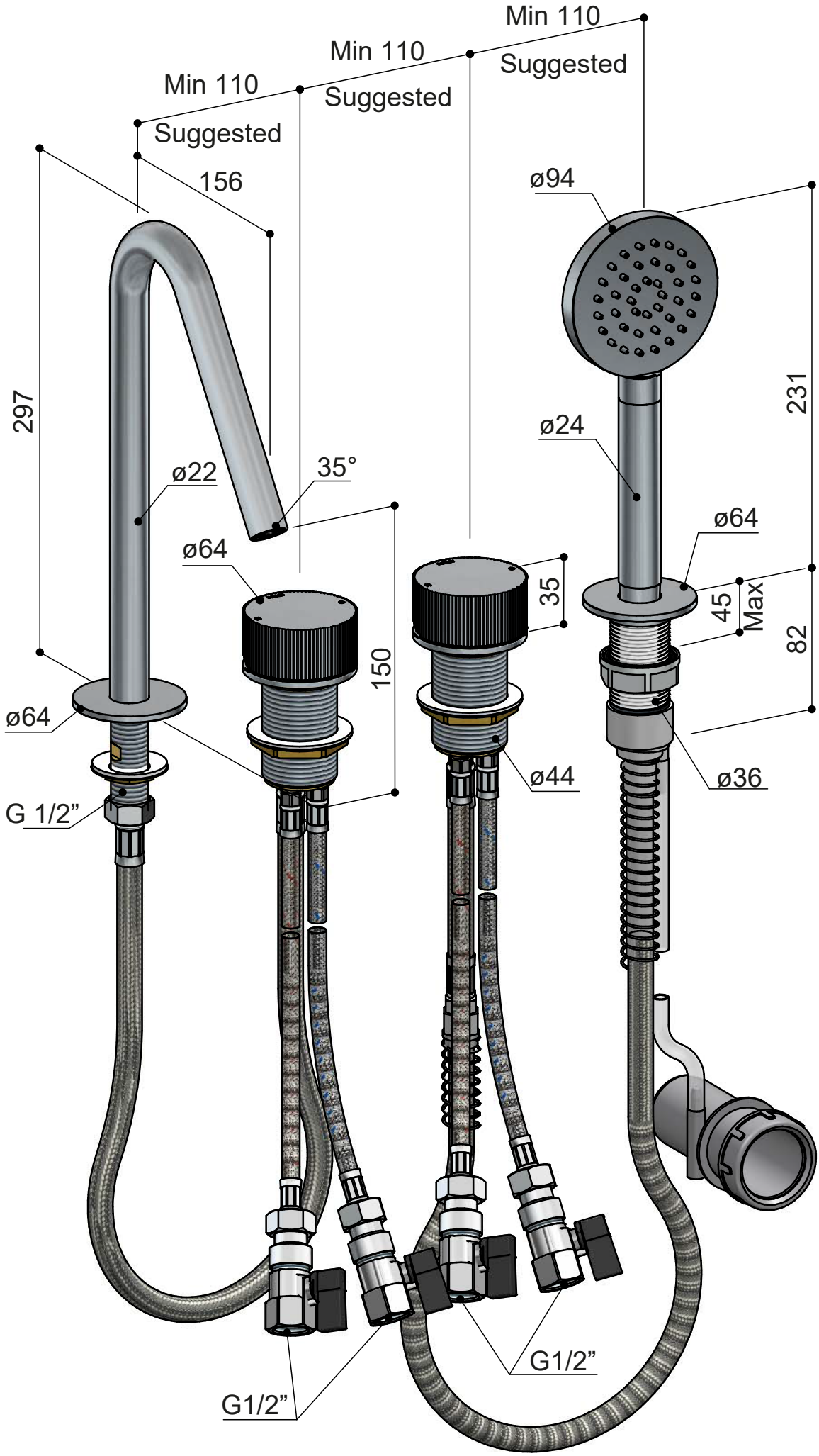
Min 110
Suggested
Min 110
Suggested
Min 110
Suggested
156
297
ø22
35°
ø64
150
ø64
G 1/2”
ø94
231
ø24
ø64
35
45
Max
82
ø44
ø36
G1/2”
G1/2”