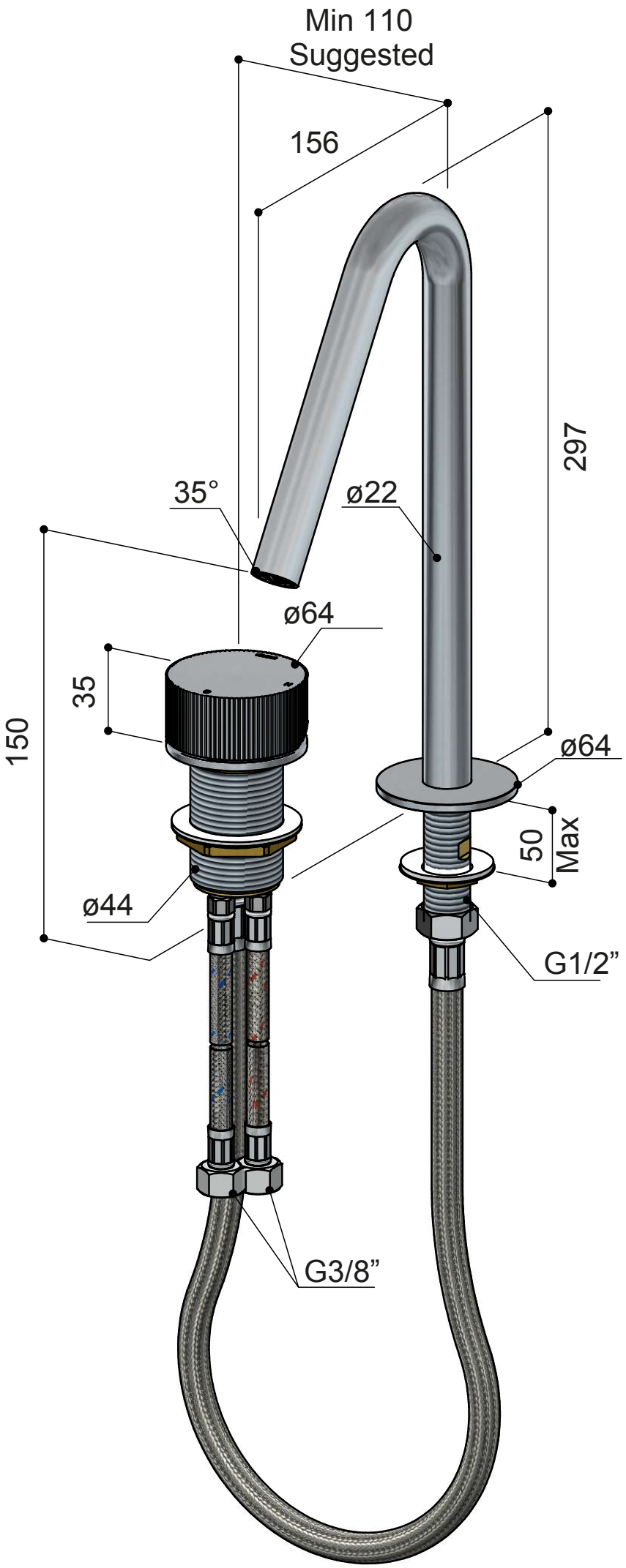
Min 110
Suggested
156
297
35°
ø22
ø64
35
150
ø64
50
Max
ø44
G1/2”
G3/8”