GT187

hotbath
Italian bathroomware

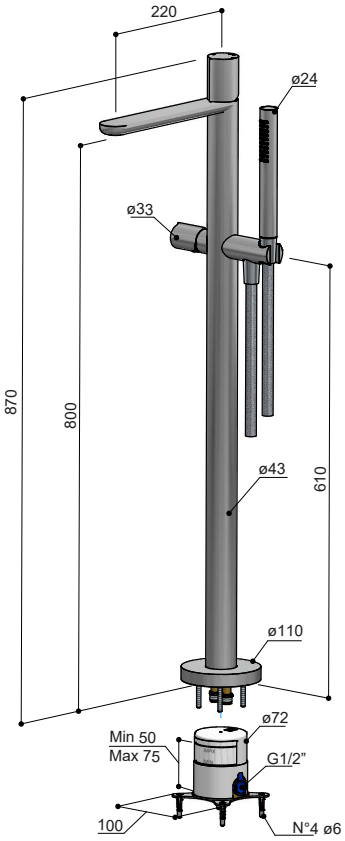

GT187EXT...

HBCB177