FKM32
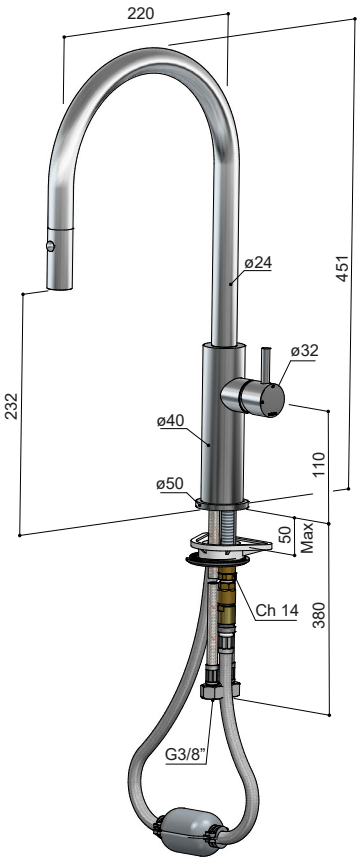
hotbath
Italian bathroomware