CB023H
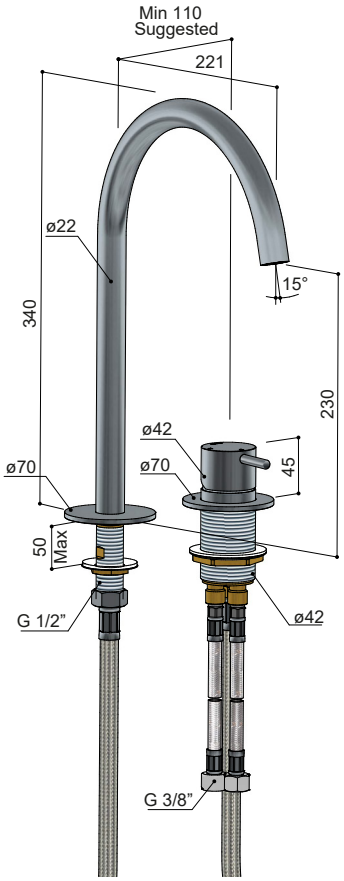
hotbath
Italian bathroomware