CB023
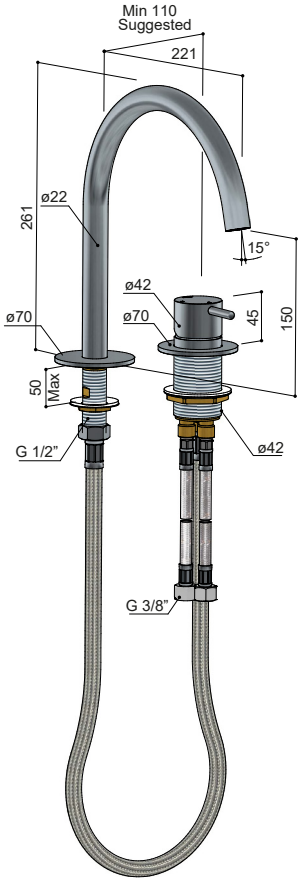
hotbath
Italian bathroomware