C104
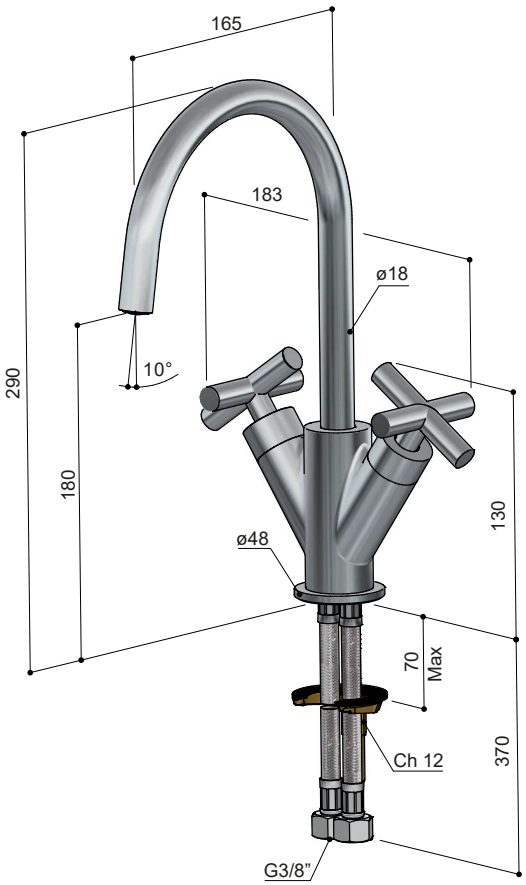
hotbath
Italian bathroomware