BSS01

hotbath
Italian bathroomware

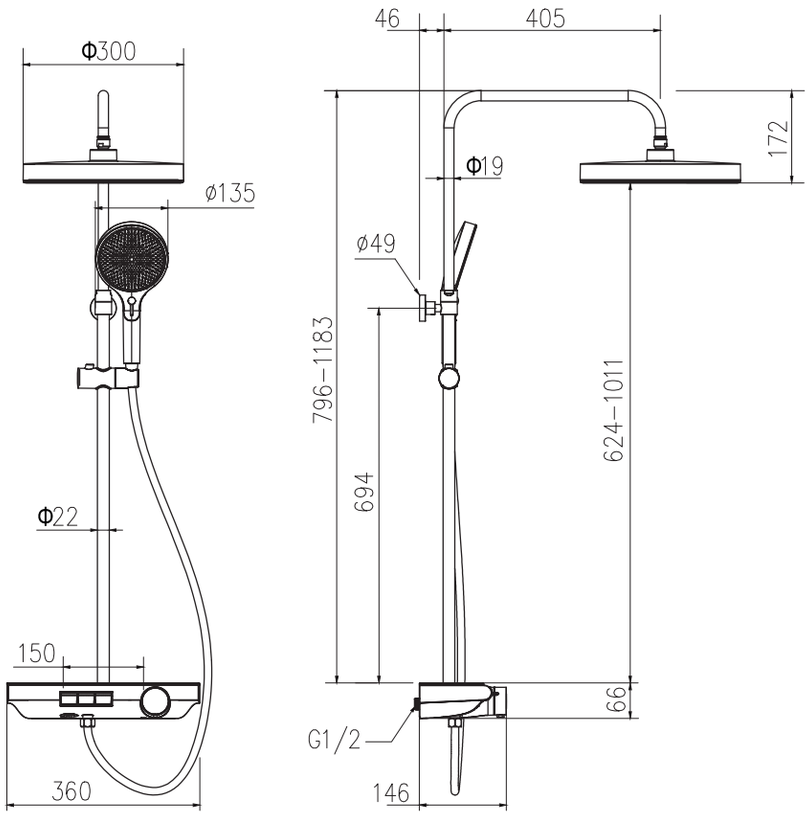

www.hotbath.com