## Technical requirement:

- All niches angle full welding, no water leakage;
- With 3000K warm LED light

## Transformer voltage standard:

220V - 230V, 50HZ

*Transformer will be put on the slope place*

## Remarks:

- Recommend opening hole size:
  148(W) * 298(H) * 85(D) mm

*The ligth belt outlet is on the upper left corner*

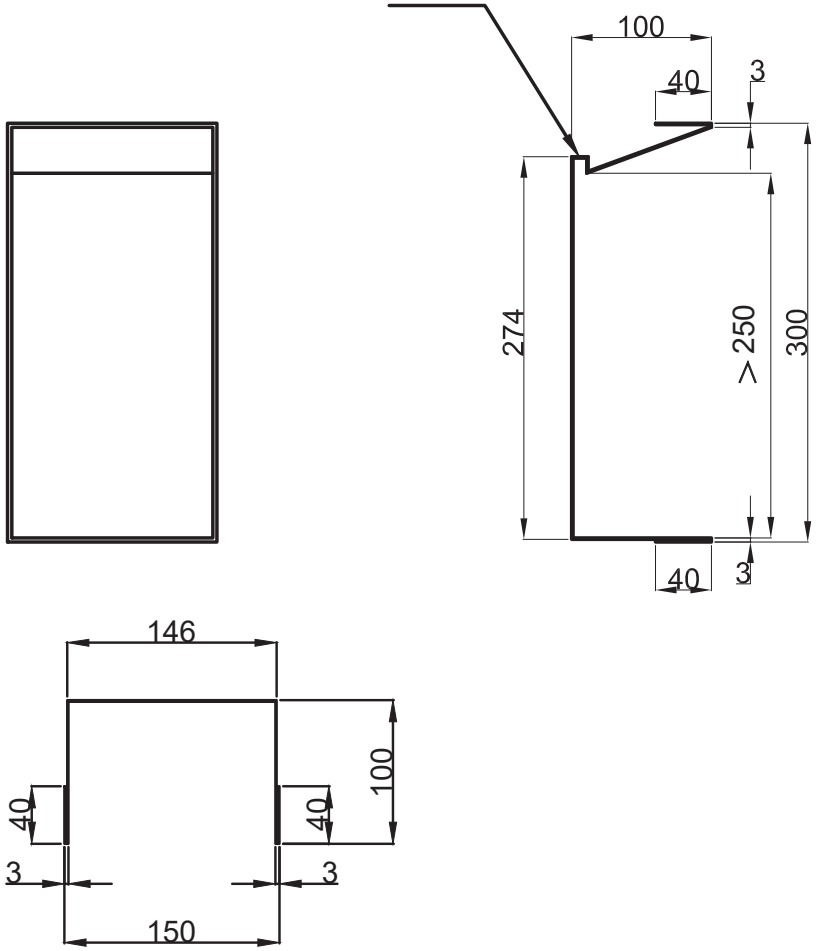


| | | | |
|---|---|---|---|
| hotbath<br>Italian bathroomware | | Boxes 300*150*100 mm<br>Drawing unit: mm | **BOX015FL** |