# B123H
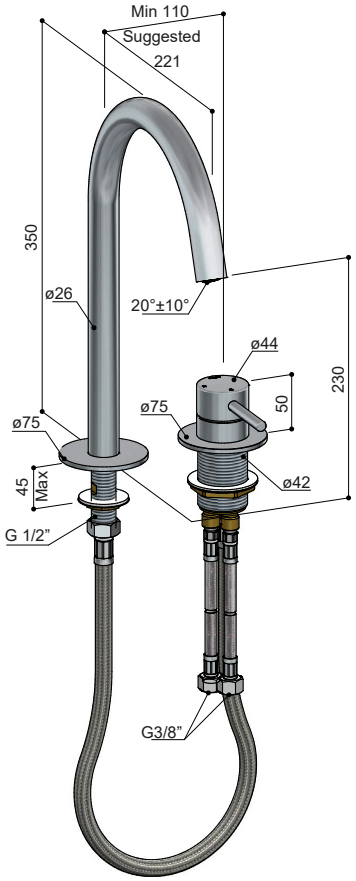
hotbath
Italian bathroomware